REV.	DATE	ECN NO.	MODIFICATION	APPROVER
A	2015/08/24	/	NEW	Vicky

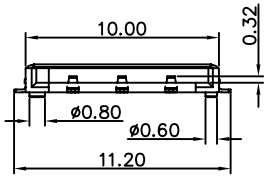

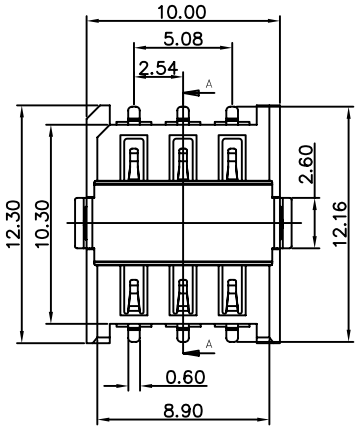

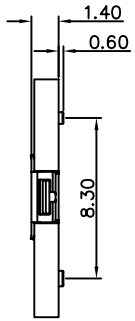

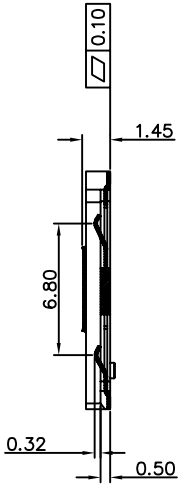

SECTION: A–A

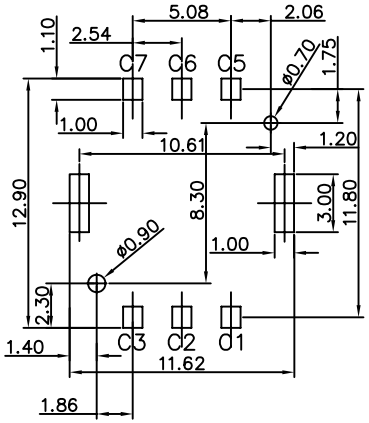

RECOMMENDED PCB LAYOUT
GENERAL TOLERANCE ±0.05

Notes:
1.Material:
Housing: LCP 30%GF, UL94V–0, Black
Contact : Phosphor Bronze, T=0.15mm
Shell: SUS304–H, T=0.15mm
2.Plating:
Contact:
Contact Area: 3U"GOLD PLATED
Solder Area: G/F Gold
Underplating: Ni overall 50u" Min.
Shell:
Solder Area: G/F Gold
Underplating: Ni overall 50u"
3.Mechanical:
Life cycles: 5000.
4.Electrical:
Voltage Rating: 30V AC RMS
Current Rating: 0.5A AC RMS Max
Operating Temperature: –20°C to +80°C
Dielectric Withstanding Voltage: 100V AC (60Sec Min)
Insulation Resistance: 100MΩ Min
Contact Resistance: 30mΩ Max

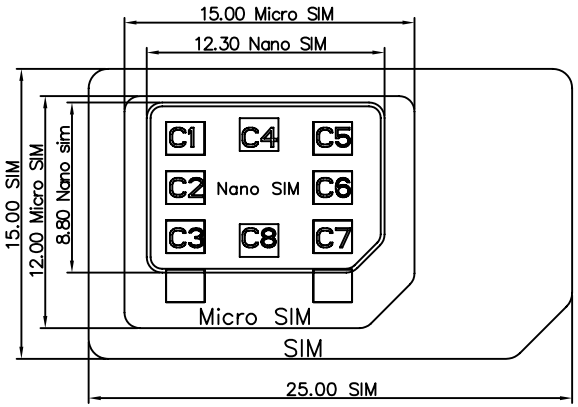

Nano SIM Card
REFERENCE DATA

C1 --> VCC
C2 --> RST
C3 --> CLK

C5 --> GND
C6 --> VPP
C7 --> I/O

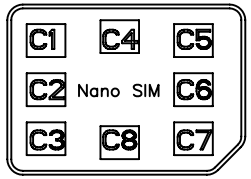

GENERAL TOLERANCE			
SELECT	✓		
TOL. / ON:	1	2	3
X.XXX	±0.10	±0.05	±0.15
X.XX	±0.20	±0.13	±0.25
X.X	±0.30	±0.25	±0.50
X.		±0.38	±1.00
ANGLE	±2°		

UNITS mm
MAT'L
FINISH
Q'TY

NAME: SIM CARD
PART NO: SI37C–08200
APPD: Vicky
CHKD: Doris
DR: Cmy

ATOM® 深圳市爱特姆科技有限公司 SHENZHEN ATOM TECHNOLOGY CO.,LTD.
TITLE: NANO SIM CARD 6P SMT H=1.4mm 带定位柱 新款
DWG NO. ATOM–A02700

SCALE	SHEET	REV
1:1	1/1	A